Tank and Silo Weighing

MODEL : SWS-100

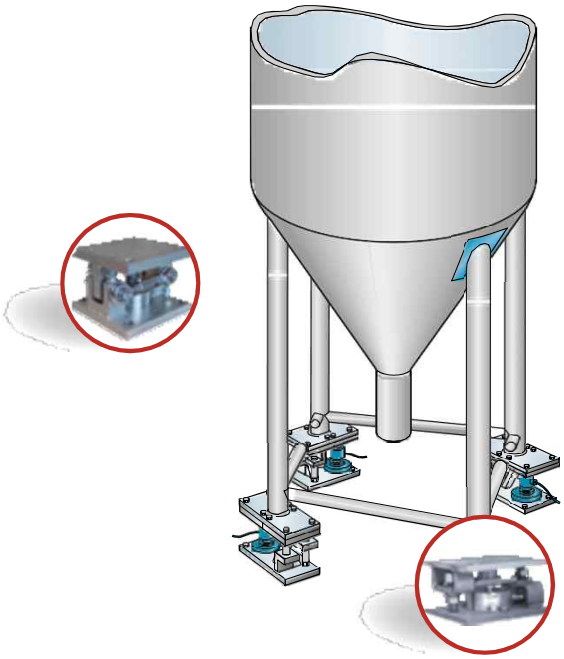

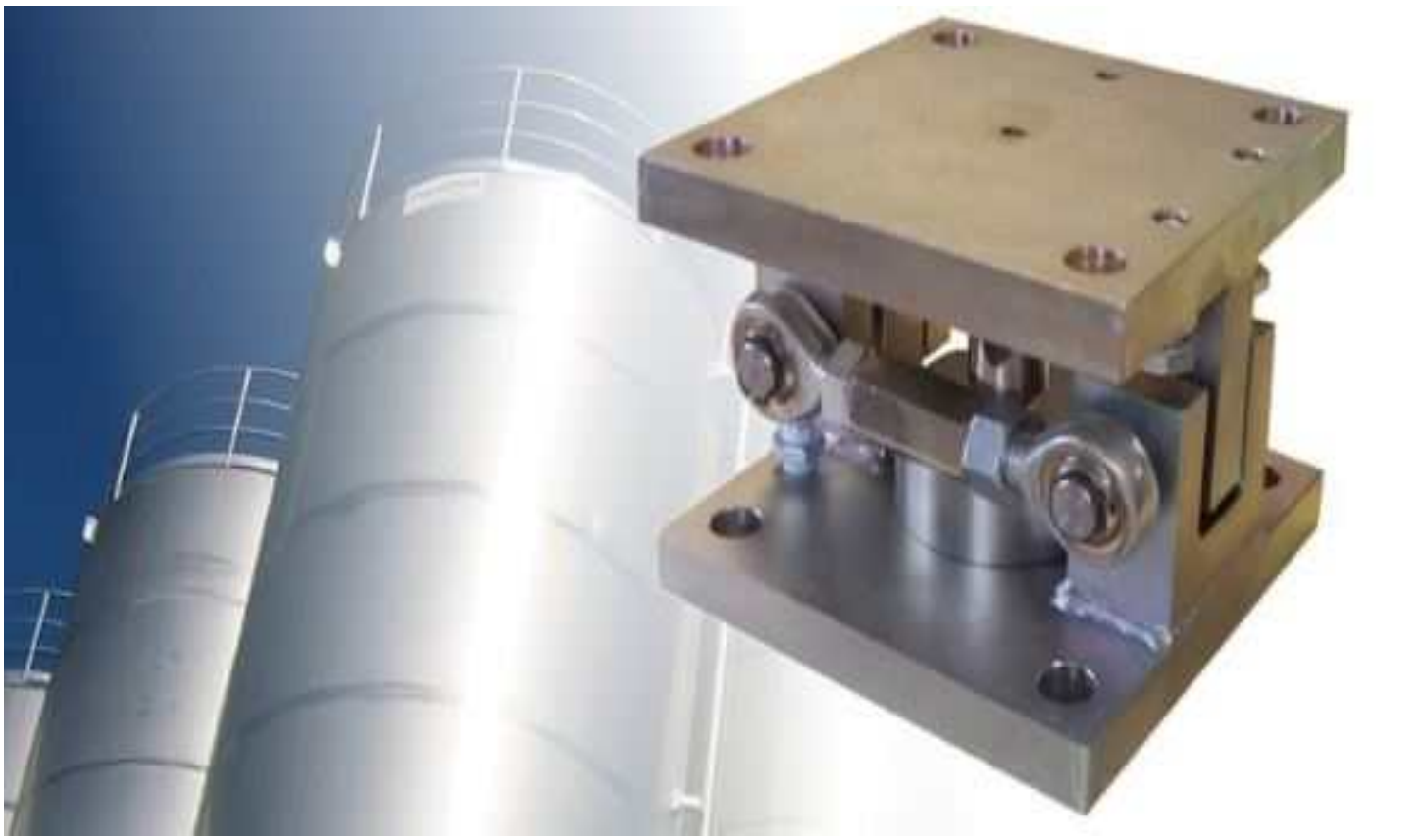

Address : Shinil B/D 3F, 14, Sunhwan-ro 226beon-gil, jungwon-gu, seongnam-si, Gyeonggi-do, 462-120 Korea

Tel : 82-31-739-6170
Fax : 82-31-739-6184
E-mail :sdso@enersys.biz
Home Page : www.enersys.biz/

Enersys
Enersys co.,ltd.

MODEL : SWS-100

Your process under control...

Reliability and safety are the most important factors to be taken into account when t comes to installing tank or silo weighing system. ENERSYS has designed solutions to meet these requirements in all circumstances.

WEIGHING SOLUTION

Load cells:

To fulfil each of your needs, our load cells cover a wide range of measuring capacities and are offered with different levels of protection and ac curacy classes.

Mounting kits:

In order to restrict the influence of the environment on the performance of your measuring chain, we offer a wide range of accessories and mounting kits, suited to each application.

Hopper and blender weighing:

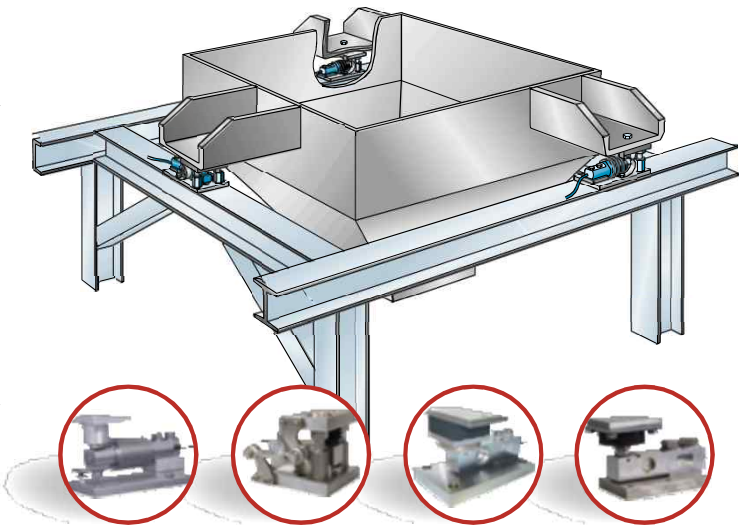

Mounting kits	5 kg	50 kg	500 kg	5 t	50 t	500 t	
RUBBERKIT	200 kg						Compression mounting kit Elastomer compensating for misalignements
ISOFLEX		300 kg		5 t			Compression mounting kit Vi bration damping elastomer
QUICKFIT		300 kg		5 t			Compression mounting kit Easy installation High precision and adjustable height
STABIFLEX				5 t			Compression mounting kit Built-in side stoppers and lift-off prevention High precision ball and cup de-coupling
SILOKIT-R			1 t		30 t		Compression mounting kit Built-in lift-off prevention and jack screw Side stabilization prevention
SILOSAFE			1 t		100 t		Compression mounting kit Built-in lift-off prevention device and Rod end bal Side stabilization of very high capacity
			1 t		25 t		
					100 t	750 t	
STABICAN				5 t		200 t	Compression mounting kit R od end ball side stabilization Built-in lift-off prevention device
CUPS					100 t	1 000 t	High capacity load cell Co mpression mounting cups
ROD ENDS	25 kg				7.5 t		Rod end ball joint kit Han ging hopper weighing

Address : Shinil B/D 3F, 14, Sunhwan-ro 226beon-gil, jungwon-gu, seongnam-si, Gyeonggi-do, 462-120 Korea

Tel : 82-31-739-6170
Fax : 82-31-739-6184
E-mail :sdso@enersys.biz
Home Page : www.enersys.biz/

Enersys
Enersys co.,ltd.

Tank and Silo Weighing



MOUNTING KIT
- Mild steel(Stainless steel in option)
- Double Lift-off prevention device
- High capacity bidirectional stoppers
- Pendulum mounting for accurate weighing
- Integrated jacking bolts
- Optional EN1090 certifi cate
- It may vary depending on the site situation.



CONTROLLER
- IP65 Stainless steel housing
- Up to 8 strain gage load cells (4/6 wires)
- Certifi cation according to OIML R76
- Programmable digital fi lters
- 2 digital inputs (4 with IO+ version) and 4 outputs
- Analog output 0-10 V or 4-20 mA (IO+ version)
- USB link for PC and RS485 link for HMI eNodTouch
- Optional Bluetooth communication



LOAD CELL(Capacities : 250 kg ~100 t)
- Made of stainless steel
- IP68, ATEX 2014/34/EU, IECEx
- Spherical load button
- Ideally suited for tank or silo weighing applications
- Easy to clean
- High temperature version (HT : +125℃) on request
- Optional connector output



LOAD CELL(Capacities : 100 t ~ 1000 t)
- Made of stainless hermetically welded
- IP68, ATEX 2014/34/EU, IECEx
- Low profile design
- Spherical load button for perfect alignment of the load
- Ideally suited for any industrial weighing and level control application



LOAD CELL(Capacities : 100 t ~200 t)
- Made of stainless steel hermetically welded
- IP68, ATEX 2014/34/EU, IECEx
- Spherical and self centering base
- Anti-rotating system included
- Ideally suited for high capacity silo weighing





JUNCTION BOX
- Junction box for 4/6 wire analog load cells
- IP66, IP65, ATEX 2014/34/EU, IECEx
- Versions for 4, 6, 8 load cells wiring
- Corner balancing by potentiometers
- Tool free connection by spring clamps
- Over-voltage protection in option

Address : Shinil B/D 3F, 14, Sunhwan-ro 226beon-gil, jungwon-gu, seongnam-si, Gyeonggi-do, 462-120 Korea

Tel : 82-31-739-6170
Fax : 82-31-739-6184
E-mail :sdso@enersys.biz
Home Page : www.enersys.biz/

Enersys
Enersys co.,ltd.

Tank and Silo Weighing

TANK AND SILO WEIGHING SYSTEM SPECIFICATION

LOAD CELL	
Rated capacity	250 kg ... 100 t
Cable length	10M ~ 20M
Protection grade	IP68, ATEX 2014/34/EU, IECEx
Material	STAINLESS STEEL
Combined error	±0.1 %
Repeatability	±0.03 %
Temperature effect on sensitivity	±0.005 %/°C
Temperature effect on zero	±0.005 %/°C
Creep error (30 min.)	±0.03 %
Compensated temperature range	-10 ... +50 °C

LOAD CELL	
Rated capacity	100 t ... 1000 t
Cable length	10M ~ 20M
Protection grade	IP68, ATEX 2014/34/EU, IECEx
Material	STAINLESS STEEL
Combined error	±0.2 %
Temperature effect on zero	±0.0050 %/°C
Temperature effect on sensitivity	±0.0050 %/°C
Creep error (30 min.)	±0.03 %
Compensated temperature range	-10 ... +50 °C

LOAD CELL	
Rated capacity	100 t ... 200 t
Insulation resistance	5 000 MΩ/50V
Protection grade	IP68, ATEX 2014/34/EU, IECEx
Material	STAINLESS STEEL
Excitation voltage	1 ... 15 V
Combined error	0.024 %
Temperature effect on zero	0.0028 %/°C
Temperature effect on sensitivity	0.0020 %/°C
Creep error (30 min.)	0.033 %
Compensated temperature range	-10 ... +40 °C

Address : Shinil B/D 3F, 14, Sunhwan-ro 226beon-gil, jungwon-gu, seongnam-si, Gyeonggi-do, 462-120 Korea

Tel : 82-31-739-6170
Fax : 82-31-739-6184
E-mail :sdso@enersys.biz
Home Page : www.enersys.biz/

Enersys
Enersys co.,ltd.

Tank and Silo Weighing

TANK AND SILO WEIGHING SYSTEM SPECIFICATION

WEIGHING CONTROLLER	
Power supply	110VAC or 220VAC 50/60Hz
Max. consumption	2.2 CAN / 3.4 PROFIBUS® / 4.4 EtherNet +3 IO+ / +7.7 eNodTouch-MS / +6.8 ML
Bridge excitation voltage	5 VDC
Input sensor range min./max.	±7.8 mV/V
Min. input sensor resistance	43 Ω
Min. signal by division	0.02 μV
Load cell connection	4/6 fi ls - wires
Housing	Stainless steel / IP65
Cable gland qty	4 (option 2 : 7)
Nominal temperature range	-10 ... +40 ° C
Accuracy class	±0.005 % F.S.
Thermal Zero/Span shift	±0.00015 typ./ ±0.0002 typ %/° C
Internal/Scaled resolution	24 bits/ ±500 000 pts
Conversion rate	6… 1600 Conv./s.
OIML certifi cates, - Class	OIML R76 - III, IIII
Nb max. range x Intervals	1 x 6000 d
Min. signal by verif. interval	0.5 μV
Data storage device	>100 000
Digital inputs	Class 3 : 11 ... 30 VDC / 12.6 mA
Digital outputs (static relays)	24 VDC/ 400 mA max.
Analog output - Resolution - Type	16 bits 0-5 V/0-10 VDC, 4-20 mA/0-20 mA/0-24 mA
Galvanic isolation	1 000 V

MOUNTING KIT			
Capacity	250 kg ... 30 t	250 kg ... 750 t	1t ... 200 t
*** It may vary depending on the site situation.			

JUNCTION BOX		
Dimension	175mm(W)*80mm(H)*57mm(D)	300mm(W)*250mm(H)*125mm(D)
Protection grade	IP65, ATEX 2014/34/EU, IECEx	IP66 / NEMA 4X
Material	Aluminium	304SS, 316SS

Address : Shinil B/D 3F, 14, Sunhwan-ro 226beon-gil, jungwon-gu, seongnam-si, Gyeonggi-do, 462-120 Korea

Tel : 82-31-739-6170
Fax : 82-31-739-6184
E-mail :sdso@enersys.biz
Home Page : www.enersys.biz/

Enersys
Enersys co.,ltd.